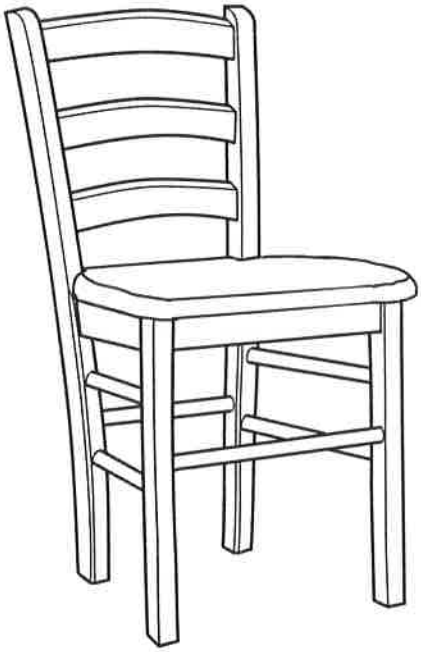

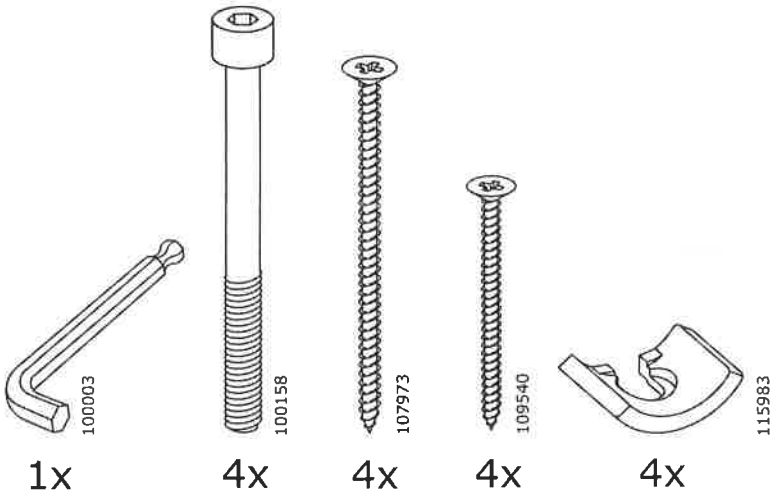
100003
100158
107973
109540
115983
1x
4x
4x
4x
4x

1

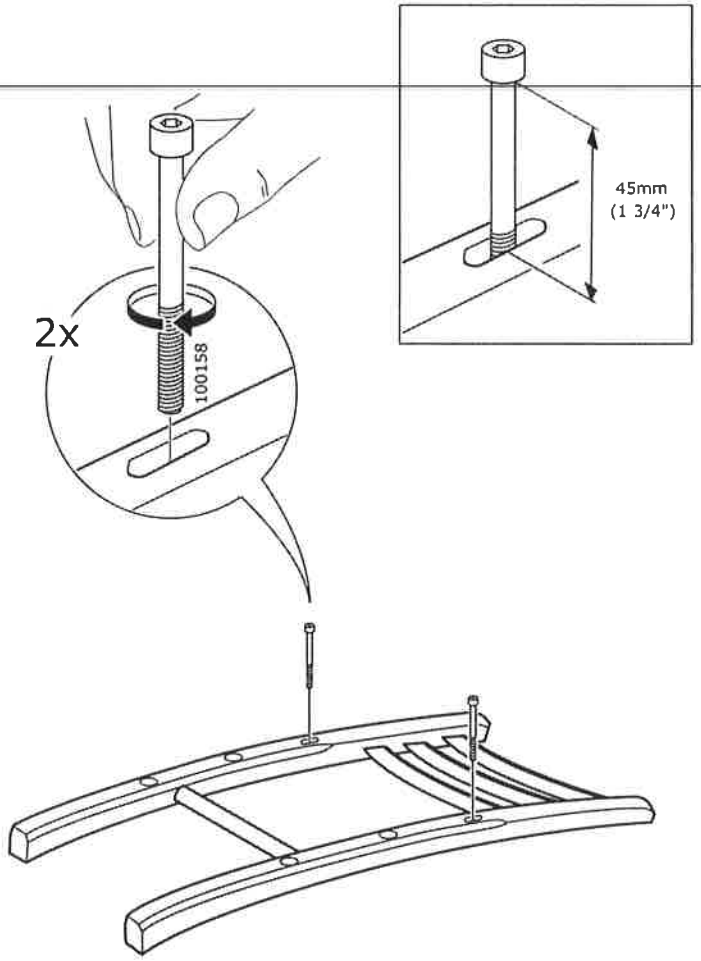
2x
100158
45mm
(1 3/4")

2

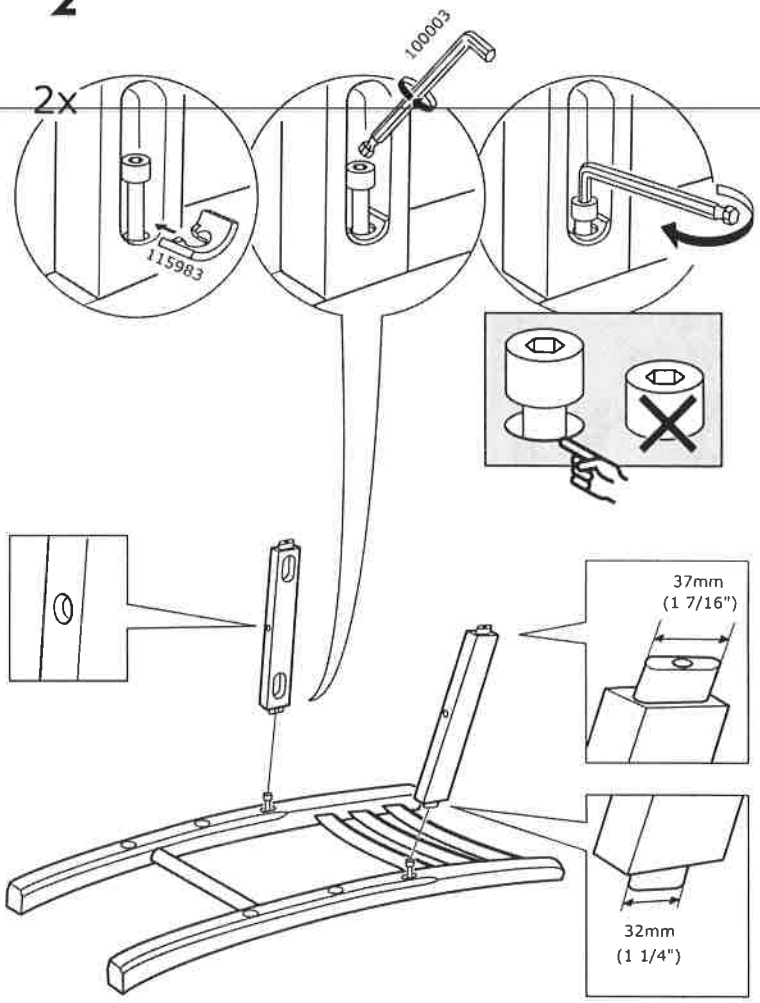
2x
115983
100003
37mm
(1 7/16")
32mm
(1 1/4")

3

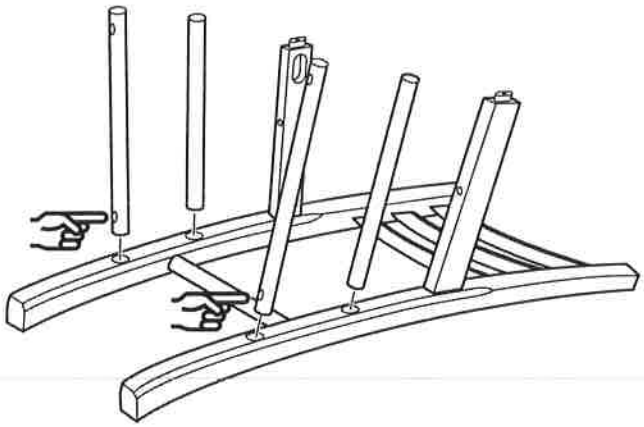

4

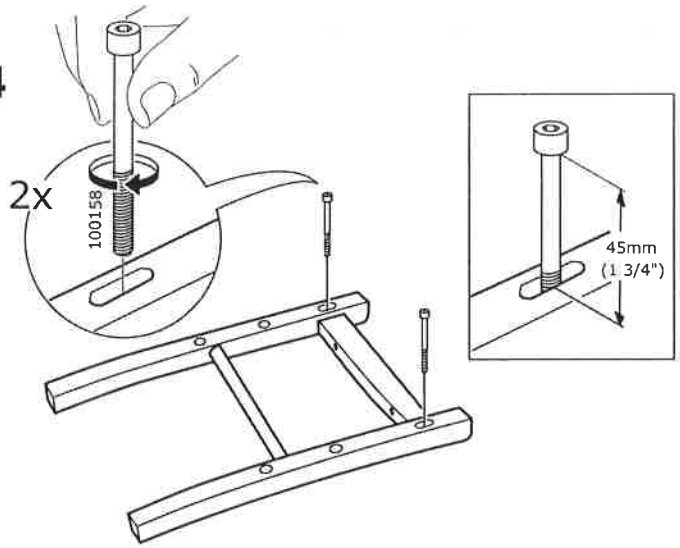
2x
100158
45mm
(1 3/4")

5

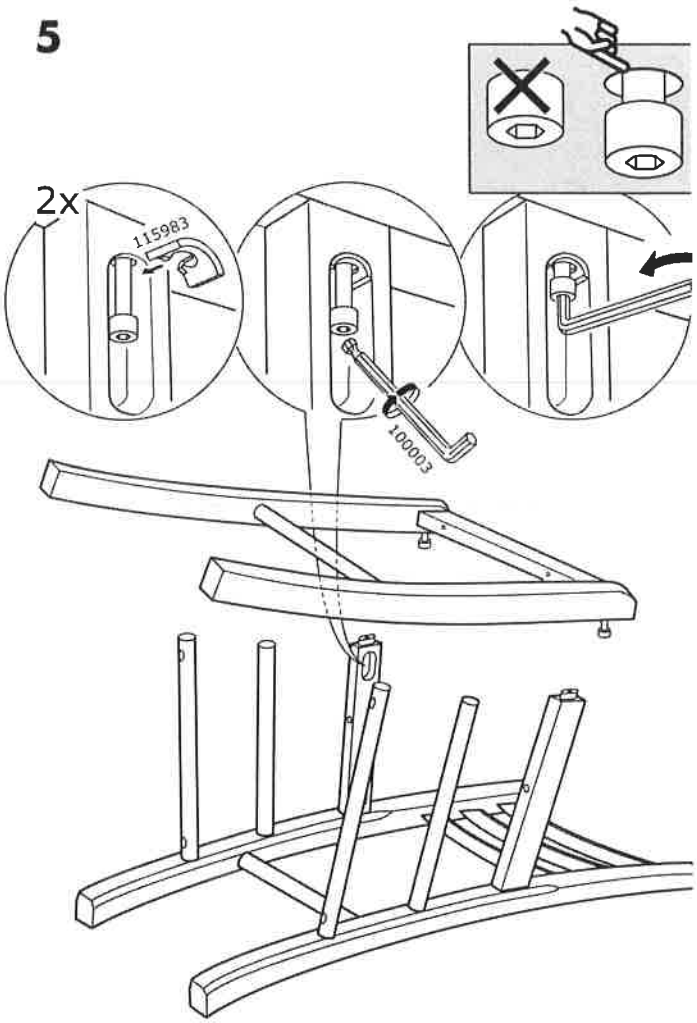
2x
115983
100003

6

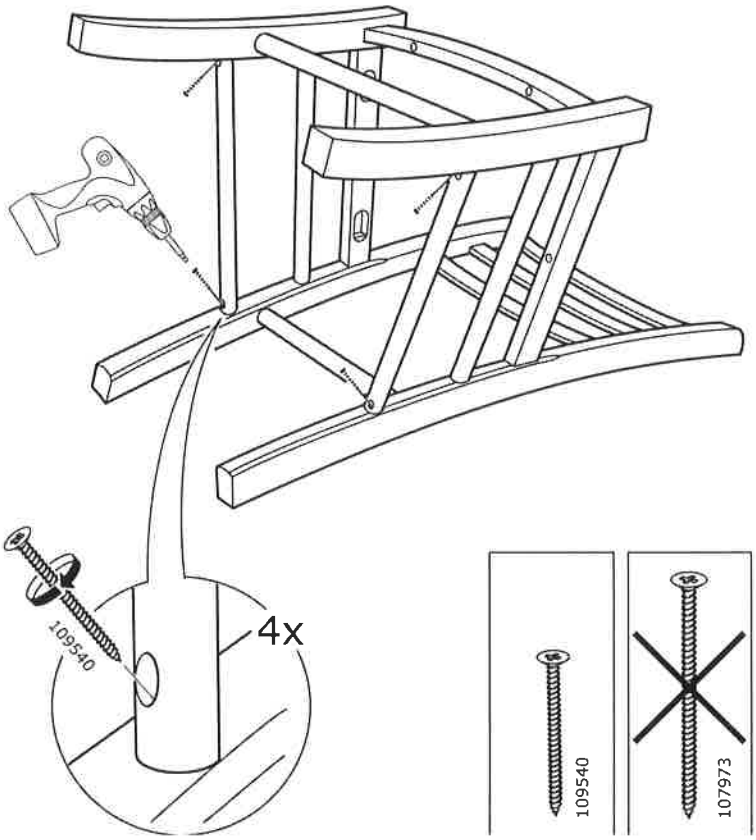
109540
4x
109540
107973

7

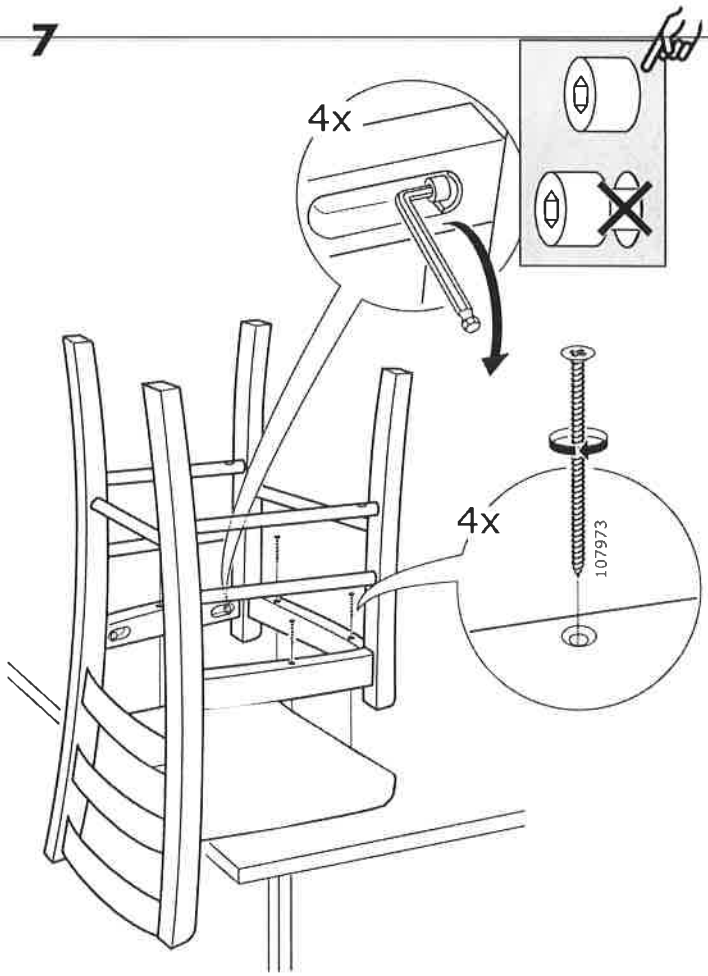
4x
4x
107973